MAN

P 300 KS

TGL 8.160 4X2 BB

KONTRAKTNUMMER: P300KS STANDARD

NY I PRODUKTION

SPECIFIKATION

TILBUDSINFORMATION

Lokationsdetaljer

Löbau, 02708 - Tyskland

Forhandler, detaljer

Palfinger Platforms GmbH

Produkttype

Ny

Kontraktnummer

P300KS Standard

Forhandler, e-mail

sales.platforms@palfinger.com

Forhandler, telefon

004935854796121

- Variabelt støttebenssystem
- Automatisk støttebensnivellering
- Muligt at køre med chassiset med jibben oppe og hovedarmen hvilende på holderen
- Home-funktion
- Memory-funktion
- Stopper bevægelser, når kurven rammer en forhindring
- Central elforsyning i kurven (24V) og ekstern 230 V CEE-plug-in på fundamentet og CEE- stik i kurven (inkl. HFI-switch)
- Aluminiumkant, begge sider er hængslet
- Automatisk justering af rækkevidde
- 4 plader inkl. holder
- Farvedisplay til kurvebetjening
- Start/stop af motor fra betjeningen
- Overvågning af batteriet inkl. advarselssignal
- Belysning af alle støtteben og betjeningselementer
- CE-mærket, overensstemmelseserklæring, declaration of conformity, servicebog
- Nødbetjeningspanel

Lakeret i RAL9010 pure white

Next unit available in CW 09.2023

P 300 KS MAN TGL 8.160 4x2 BB

Producent	PALFINGER
Model	P 300 KS Facelift
Produktionsår	NEU - NEW
Rækkevidde	20,5 m
Maks. arbejdshøjde	30,0 m
Søjlerotation	540 °

Kurvestørrelse	1,80 x 1,00 x 1,10 m
Kurvens kapacitet	400 kg
Kurvens rotation	+/- 85°
Basket arm angle	195 °
Kurvemateriale	Aluminium

Lastbilproducent	MAN
Vehicle type	TGL 8.160 4x2 BB
Produktionsår	NEU - NEW
Førerhus	C

Akselafstand	3.050 mm
Hestekræfter	118 kW / 160 PS
Emissionsnorm	EURO 6
Aksler	4x2
Totalvægt	7.490 kg

PALFINGER

P 300 KS FACELIFT

COMFORT LIKE NEVER BEFORE

LIFETIME EXCELLENCE

HIGHLIGHTS

- 30m working height with 400kg cage load
- Powerlift-System with max. 300kg payload, 150kg per load cross bean/boom
- Improved performance data of minimal mode: 10° movement to the left and right with full jib manoeuvrability, operations at 8 meters working height without stabilizers
- Improvement of ergonomics: optimized underrun protection due to enlarged control boxes as well as improved slope angle
- Stabilizer operation from the base at the left and at the right side
- Convenient access to the working cage
- Thanks to the fully variable stabilizer system, the stabilizers can be positioned precisely, even on uneven terrain with 730mm stroke and up to 5° of inclination
- The shortest overall length and wheelbase in this class (3050mm) ensures good manoeuvrability

STANDARDS

- Home function
- Memory function
- Foldable Aluminium bordering enable easy transport of bulky parts
- Cage load measurement device
- Cage exchange system - enables an easy and quick exchange of aluminium and fiberglass working cages
- Automatic adjustment of outreach due to monitoring of the platform's inclination. Fast, safe working despite vehicle inclination.
- 4 Safety spreader plates
- Battery voltage monitor
- Emergency control panel
- 230V CEE power supply with CEE socket in the workman cage

OPTIONS

- Protection guard on top of driver's cab
- Dividing screen with bracket at the main boom rest and in the cage
- Wooden frame on the cage
- Bracket for chainsaw
- Bracket for 7 traffic cones mounted on the chassis covering
- Airline rails at the bordering incl. 4 fittings
- Vertical parallel drive of the cage
- 2 covers for warning beacons at the turntable and at the main boom rest
- 4 working lights mounted at the basic frame to illuminate the outrigger areas
- 2 working lights mounted on the left and right side at the main boom rest to illuminate the surrounding
- Short rear underrun protection (with integrated rear lighting)
- Electric emergency pump
- Device for checking axle-position for both axles, with one sensor per tyre each
- Insulation package in combination with aluminium cage: Double insulation against 1000V according to DIN VDE 0682-742.
- Possibility of mounting on all-wheel drive or standard chassis of various manufacturers and weight classes with optimized jack-up widths

TECHNICAL SPEZIFICATIONS

Total weight*	7490 kg
Overall length	7,60 m
Width in transportposition	2,52 m
Height in transportposition	3,50 m
max. stabiliser width	5,00 m
max. working height	30 m
max. cage bottom height	28 m
max. outreach *	20,50 m
Rotation angle of turntable	540°
Rotation angle of cage	+/-85°
Rotation angle of cage boom	195°
Size of cage	1,80 x 1,0 x 1,10 m
max. cage load	400 kg

* Depends on truck chassis

WORKING DIAGRAMS

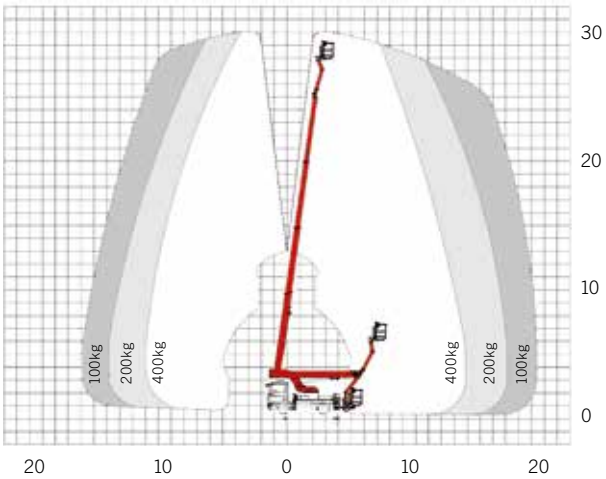

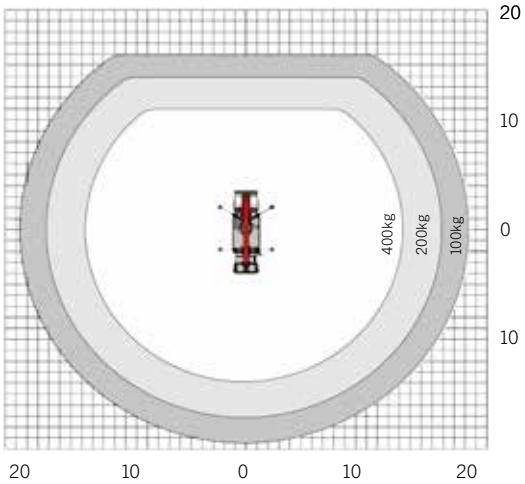

A possible 2% tolerance is contingent on structural components

DIMENSIONS

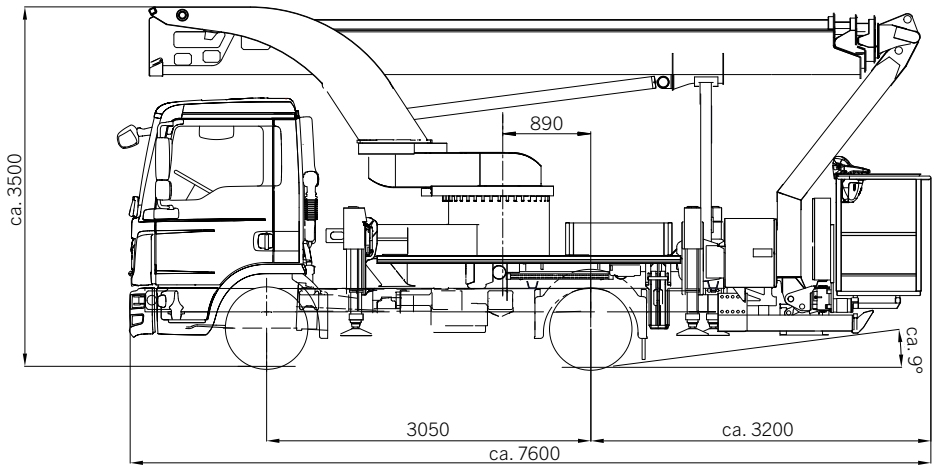

YOUR CONTACT

Palfinger Platforms GmbH
Düsseldorfer Str. 100
47809 Krefeld | Germany

KP-P300 KSM3 +EN

Units shown in the leaflet are partially optional equipped and do not always correspond to the standard version. Country-specific regulations must be observed. Dimensions may vary. Subject to technical changes, errors and translation mistakes.